S POWER

Portable Machining&Welding Solutions

S60

Portable Line Boring Machine

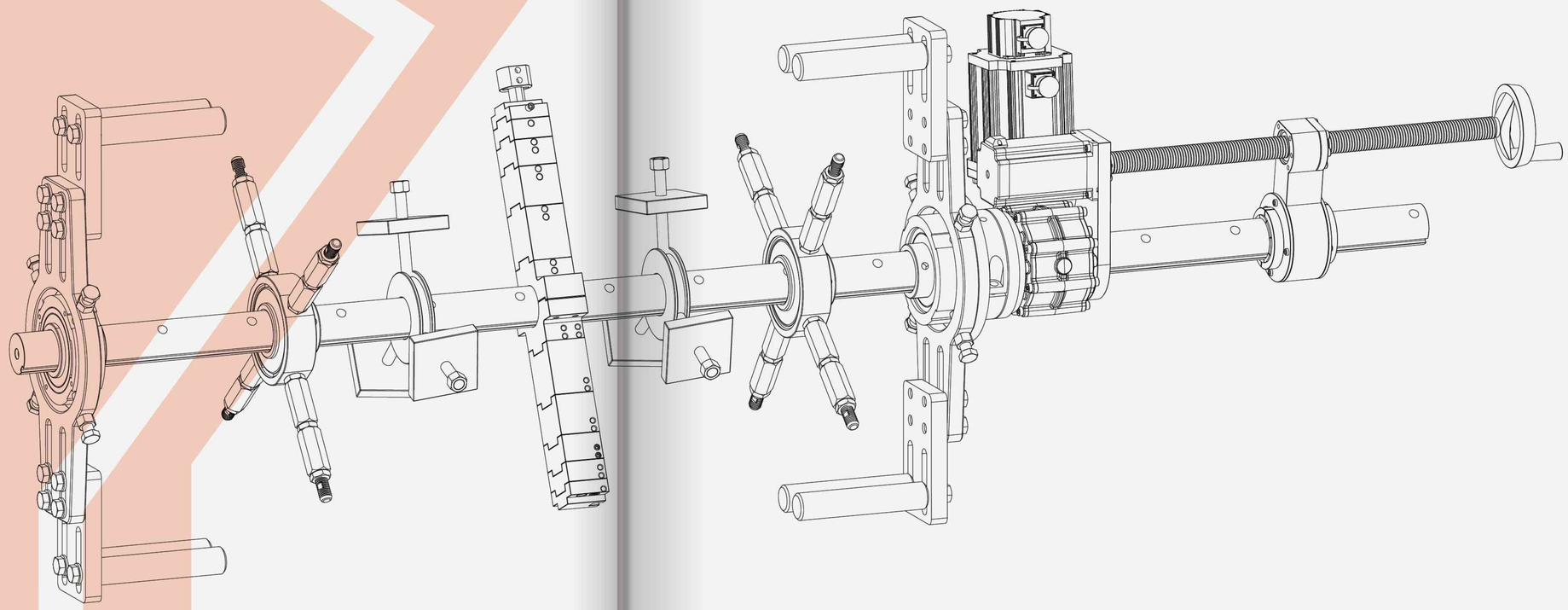

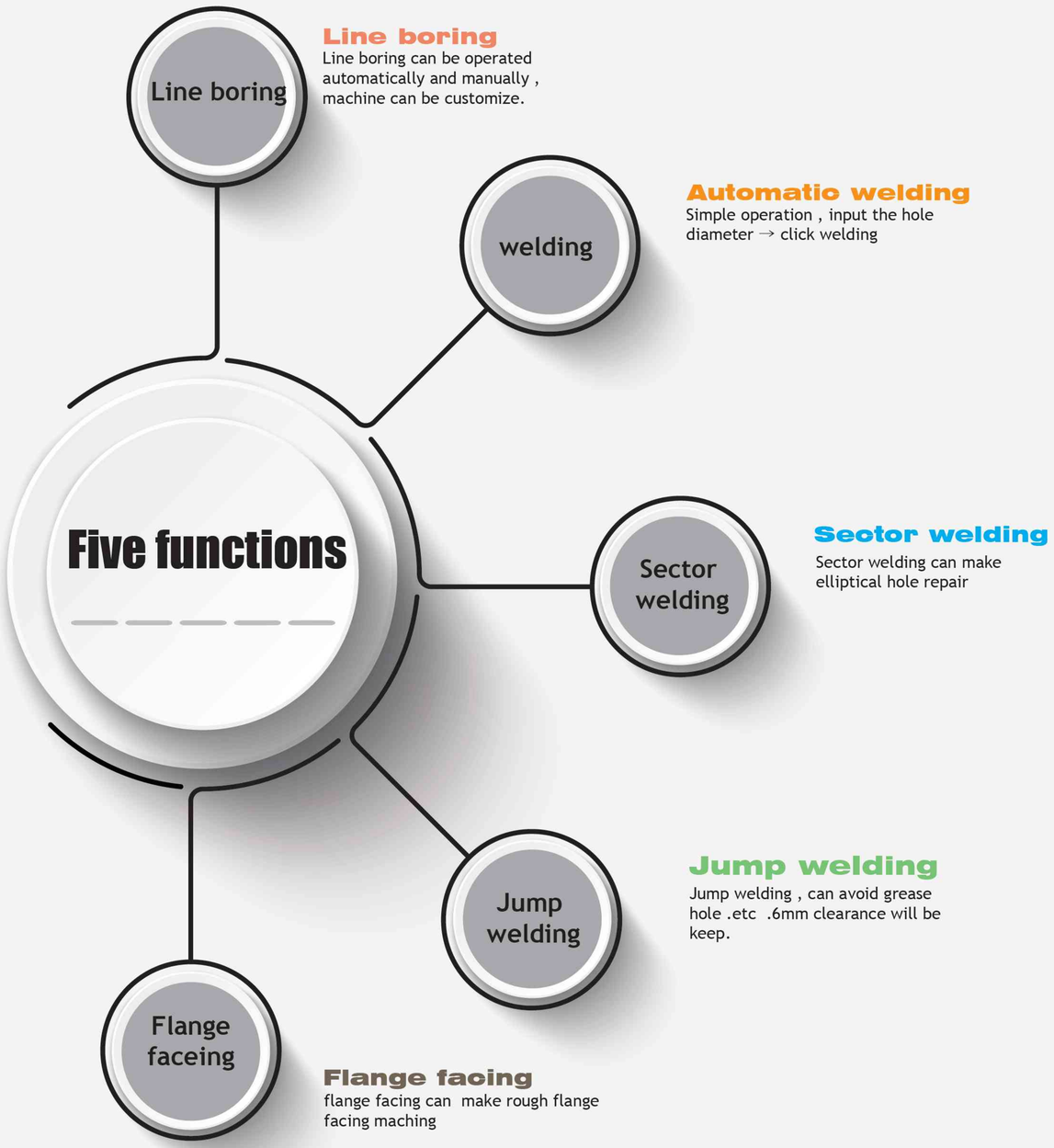

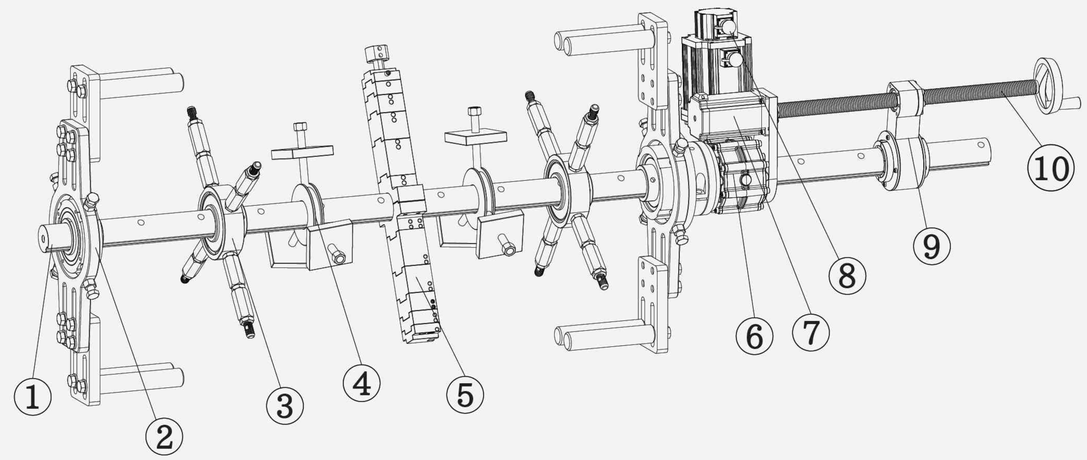

1 • Line boring bar

2 • Spherical bearing support frame

3 • Bearing support assembly

4 • Alignment and bearing

5 • Big tool holder

6 • Gearbox

7 • Axial feed motor

8 • Servo motor

9 • Axial feed frame assembly

10 • Axial feed screw bar

STEP 01

Machining range

It can handle inner holes with diameters between 65mm and 600mm. This versatile tool that is used in many industries. which ensures high-quality machining .

STEP 02

High-Quality servo motor

S60 use high-quality servo motor to ensure the durability and precision of works. This kind of motor has the characteristics of long life, and the reliability is very high.

STEP 03

Small size and light weight

One of the advantages , its small size and light weight. it can be easily carried and operated. This is especially important for users who need to move frequently on mobile devices.

STEP 04

Multiple scenarios

S60 is suitable for a variety of scenarios. Whether it is the repair of the shaft hole of construction machinery, or the repair of the shaft hole of mining machinery, or the repair of the shaft hole of port machinery, ship maintenance or production shaft hole processing, or even thermal power equipment, it can give full play to its function.

- H • hertz:50Hz/60Hz
- W • power： 3800w
- N • Speed:30-133rpm
- F • Axial feed speed:0- 0.5(s)
- Φ • Line boring diameter:65-600mm
- E • Axial machining length:by bearing quantity
- L • Axial machining depth: 1.5 mm
- ae • Radial machining width:0.03-3mm
- CV • Speed regulation:Stepless speed regulation
- N.m • Output torque:220N.m
- V • Voltage:220V/380V
- ADC • Cut width:0.02-1mm
- Φ • Line boring bar diameter:Φ60mm
- mm • Standard line boring bar length:2200mm
- Φ • Welding diameter:65-600mm
- H • weld width:3mm
- Φ • weld thickness:Φ6-8mm
- co2 • Applicable welding machine type:co2
- Φ • Recommended wire diameter:0.8/1.0/1.2
- V • Recommended welding machine model:Power 200 - Power 500

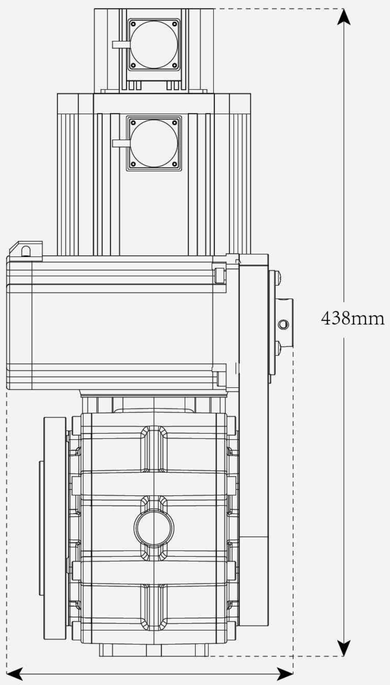

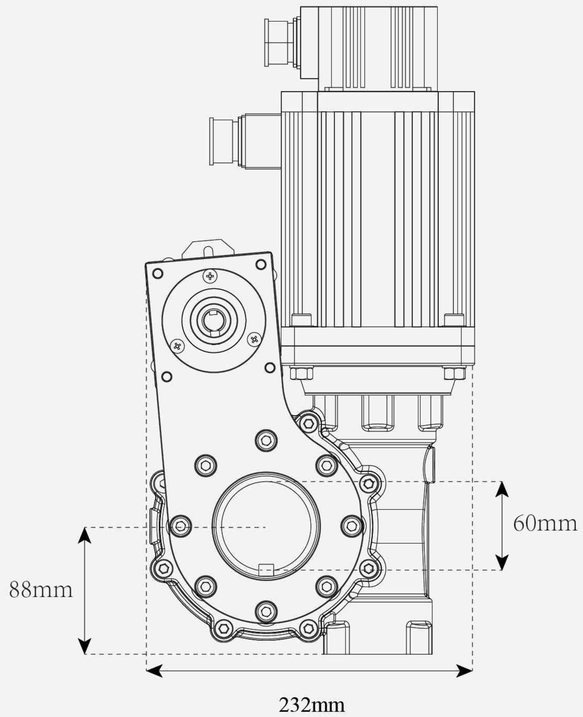

- H • hertz:50/60Hz
- W • power：3100w
- N • Output speed:30-130rpm
- F • Axial feed speed:0- 0.5 (s)
- V • Voltage:220V/380V

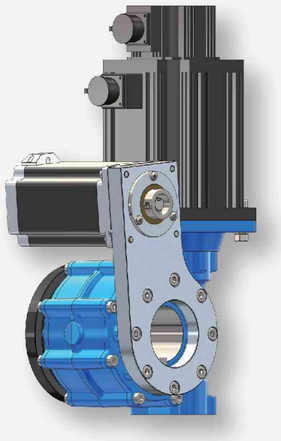

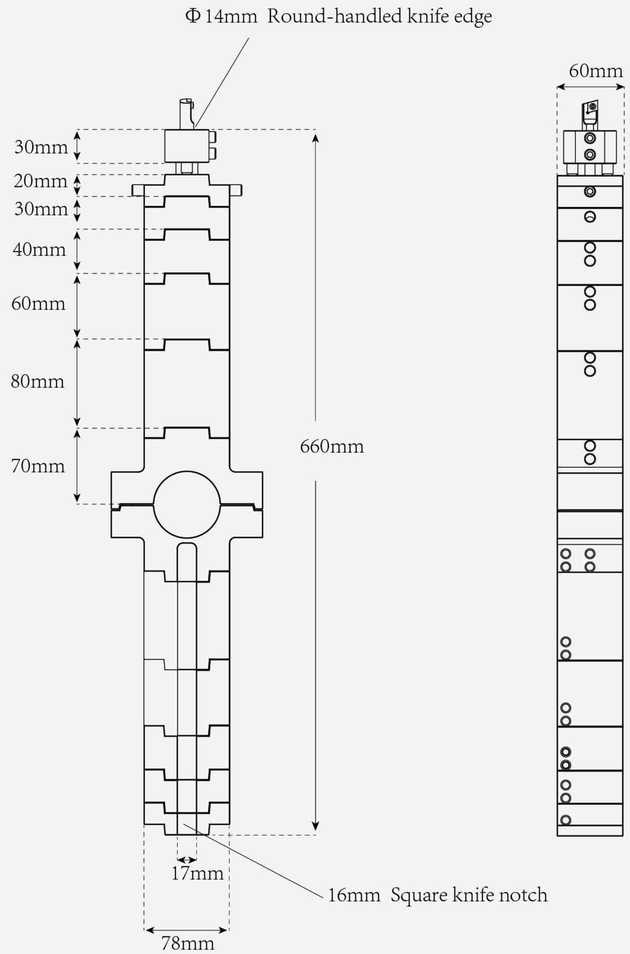

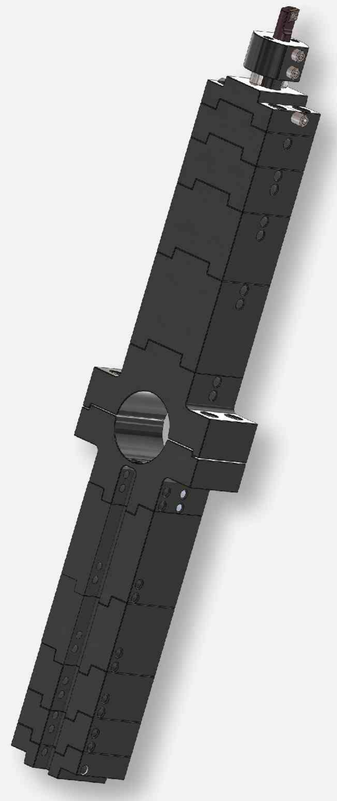

- S60Line boring machine has a patented "modular tool holder", which is more convenient to carry than the traditional single-size tool holder, and it can be better adapted to any size of the bores .

“I” type bearing support

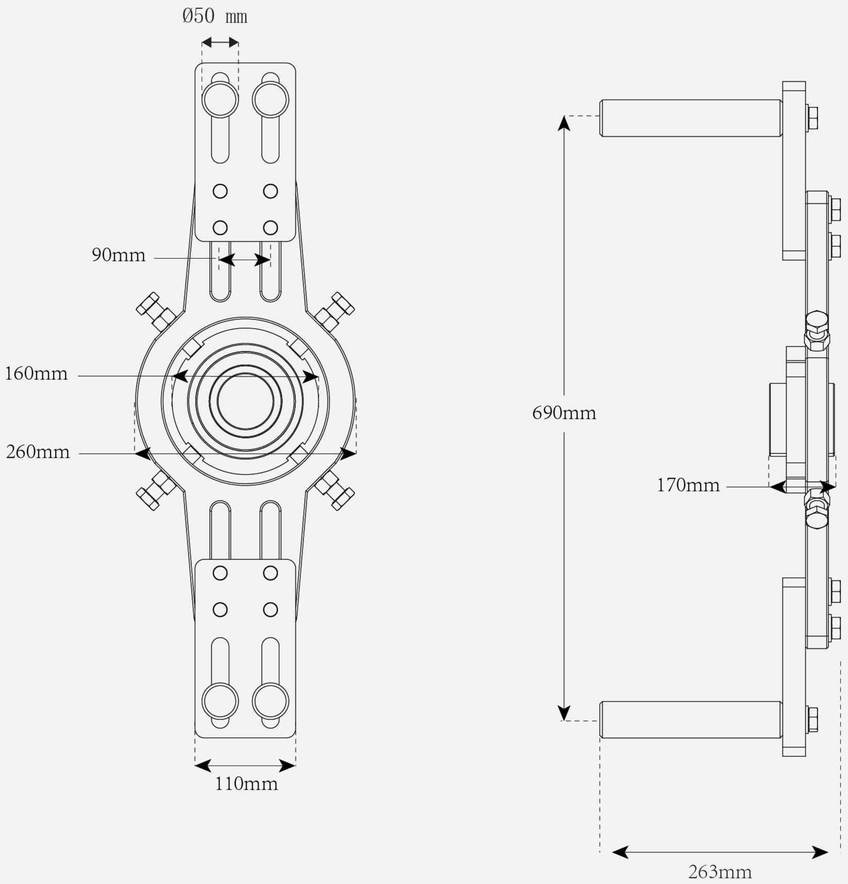

- Double-arm bearing mounts
- Maximum support diameter: 270-620mm

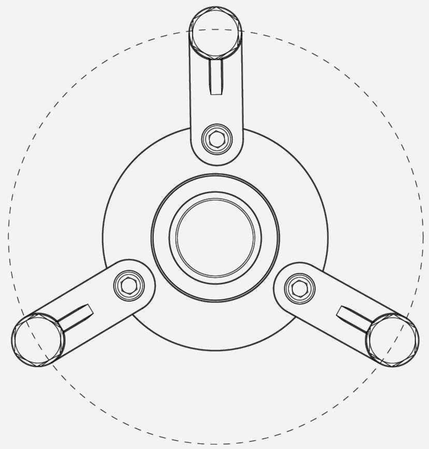

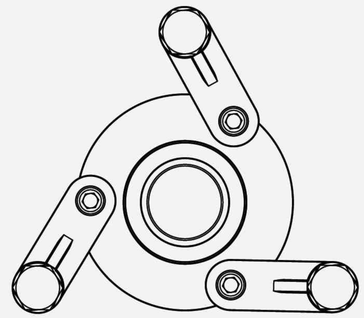

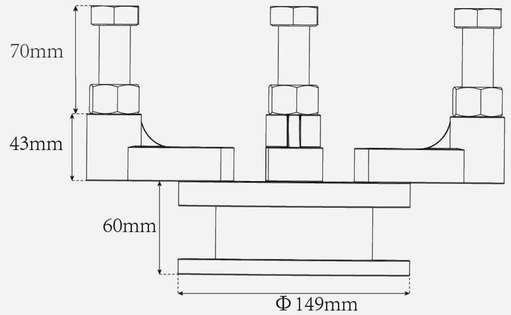

- Maximum support diameter: 65-270mm

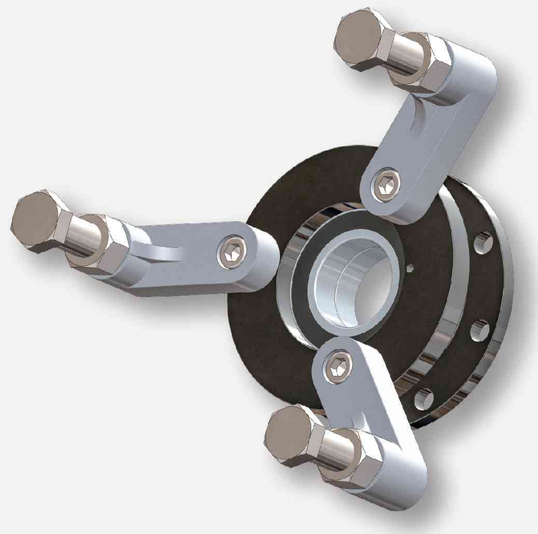

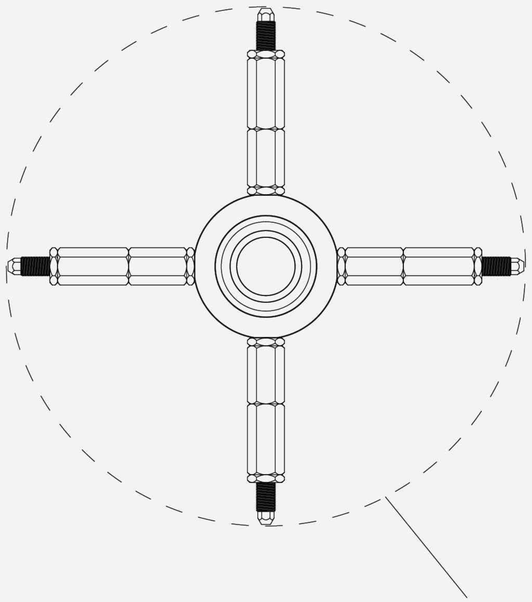

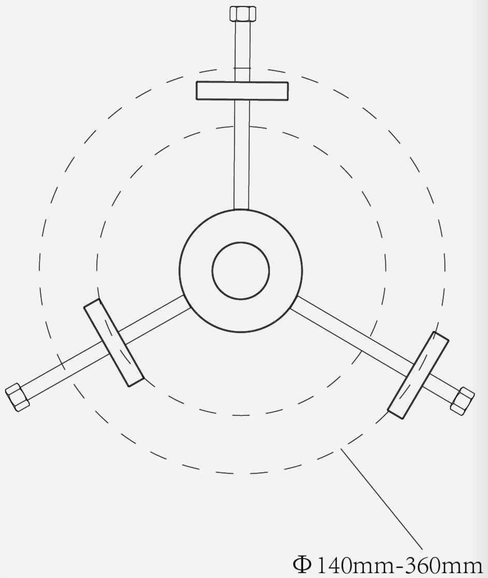

- Spherical bearing centering device

  Suitable for inner bore with inner diameter 300mm-600mm

- Three-way centering device
  External welding fixation
  Scope of work:150-300mm

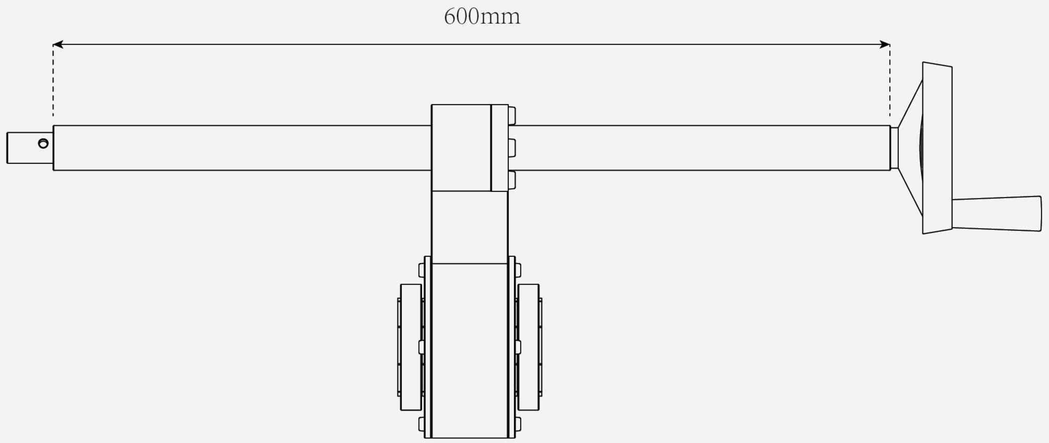

- Standard length: 600mm

- The maximum length that can be customized is: 1000mm

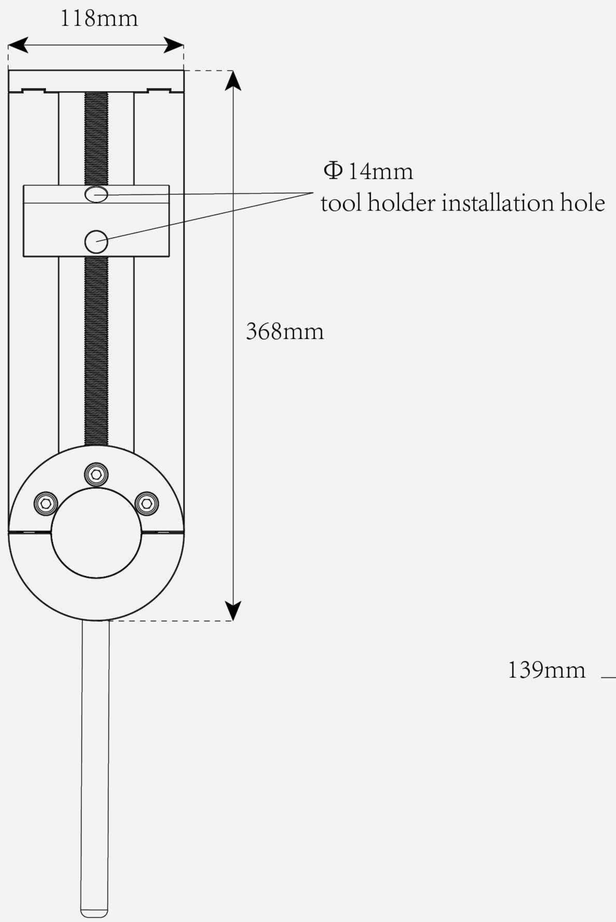

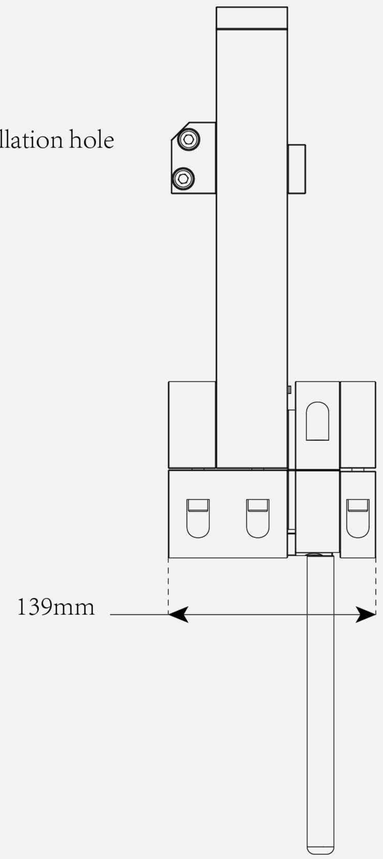

- Radial feed method: Gear automatic
- Flange facing:160-600mm

optional spare

Boring bar as standard: 1200mm

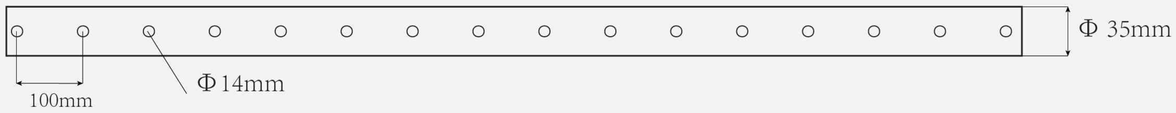

- Optional 35mm system : line boring Φ40-75mm

optional spare

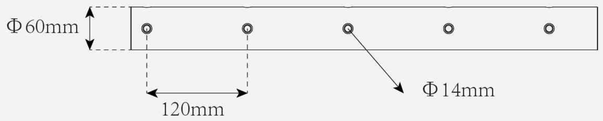

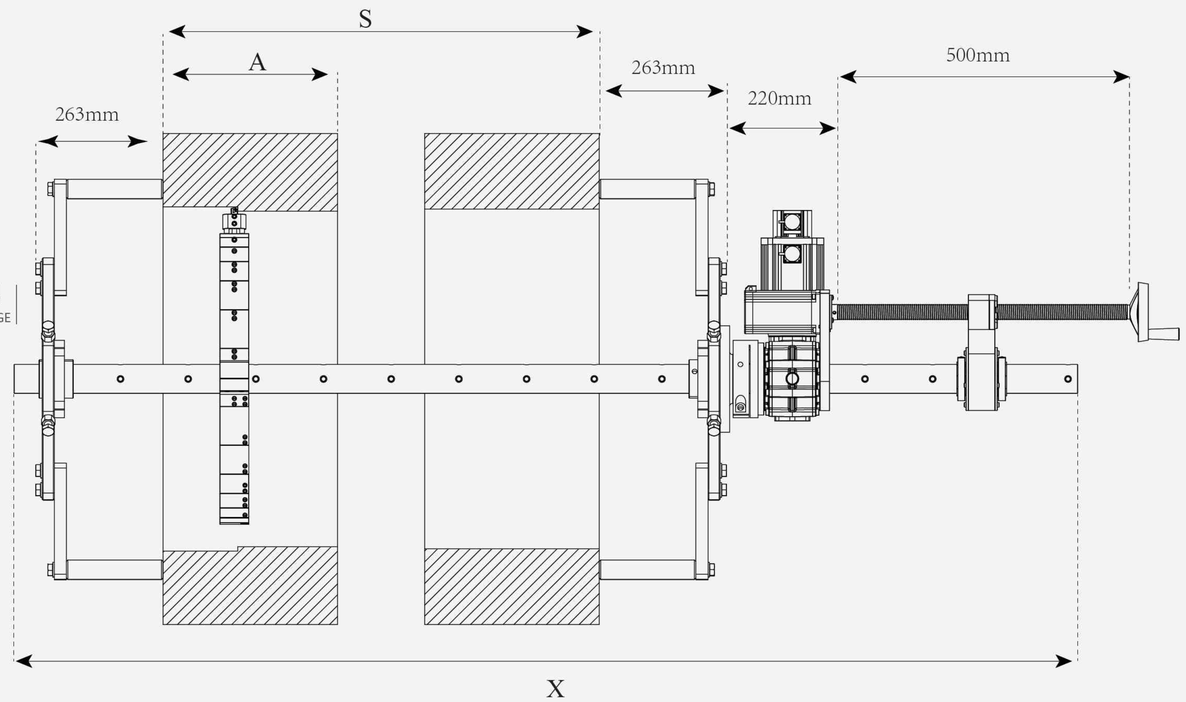

Custom line boring bars length.
Calculation formula

- (X)Line boring bar length＝
  (S)The total length of the workpiece＋
  (A)Processing length＋
  (1136mm)S60 line boring machine required length

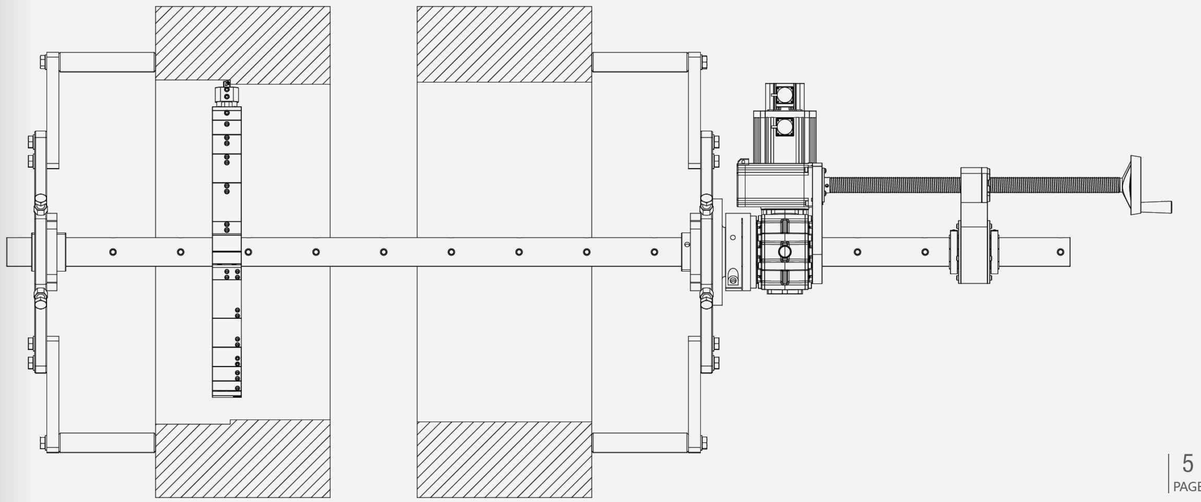

- mm — Forward and reverse operations
- Φ — Axial feed supports forward and reverse operations.
- mm — Boring bar length: 2200 mm
- Φ — Line boring diameter:65-600mm
- E — Axial machining length:0.5-1000mm
- H — Surface roughness: Ra 3.2(25) μm
- Ap — Radial cutting width: 0-3 mm
- Ae — Axial cut depth: 0-1.5 mm

Schematic Automatic welding

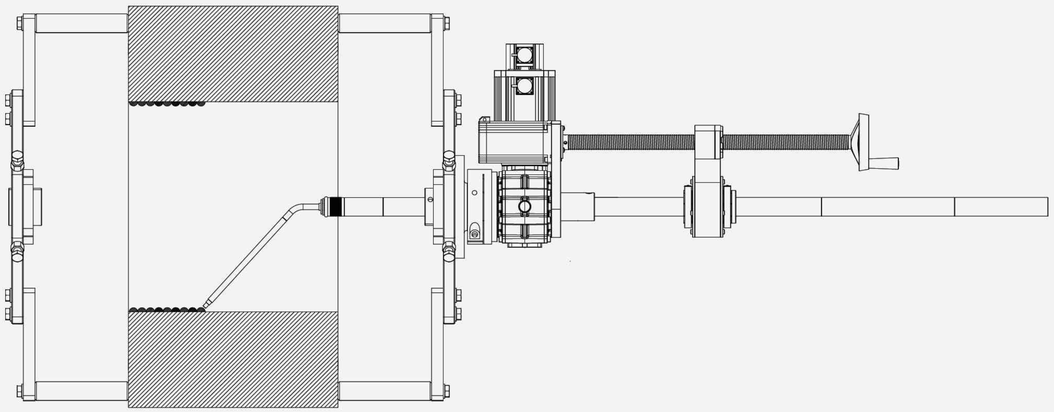

- L — Welding torch empty tube length: 200/240/300/800mm
- Φ — Welding diameter:65-600mm
- L — Welding Gun Cable Length:4540mm
- H — The axial welding length is less than 1000mm
- W — weld width W=3-4mm
- Ae — Axial cut depth: 0-1.5 mm
- W — Intermittent welding width:15mm
- W — Sector welding width:4-299mm

Flange Face Machining Diagram

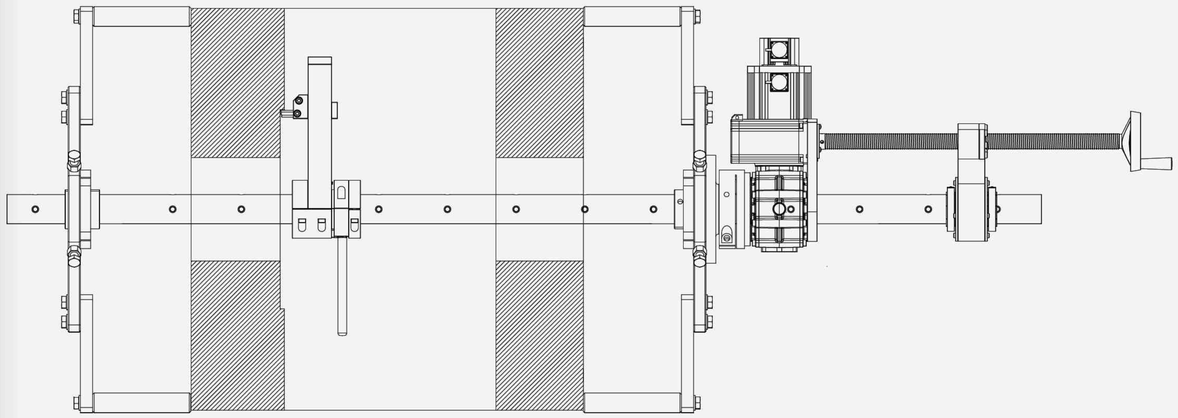

Flange Face Application

- Machining range: 160-650mm

S POWER
Portable Machining&Welding Solutions

S POWER
Portable Machining&Welding Solutions